# SPECIFICATION SHEET

**COLLECTION:**OMIKA

**PRODUCT CODE:**OMI-145A-C/P

## DESCRIPTION:

Omika
concealed 1 outlet shower valve
single lever
wall mounted
with rectangular backplate
ceramic cartridge CAR-K35A
2 x 12 female inlets
2 x 12 female outlets one is blanked off
min-max wall mount 40-65mm
minimum operating pressure 02 bar LP sho

## FINISH:

Chrome

## WATER SAVING:

recommended flow regulator product code: FR-100/5-PLA

## MINIMUM OPERATING PRESSURE:

0.2 bar LP (shower) 1.5 bar MP (bath)

## FLOW RATE AT 3.0 BAR FLOW PRESSURE:: /min

12 year guarantee

tel: 01934 744466
email: sales@vado.com
www.vado.com

where inspiration flows
taps | showering | accessories

VADO

# TECHNICAL DRAWING

**COLLECTION:** MANUAL VALVES
**PRODUCT CODE:** OMI-145A-C/P

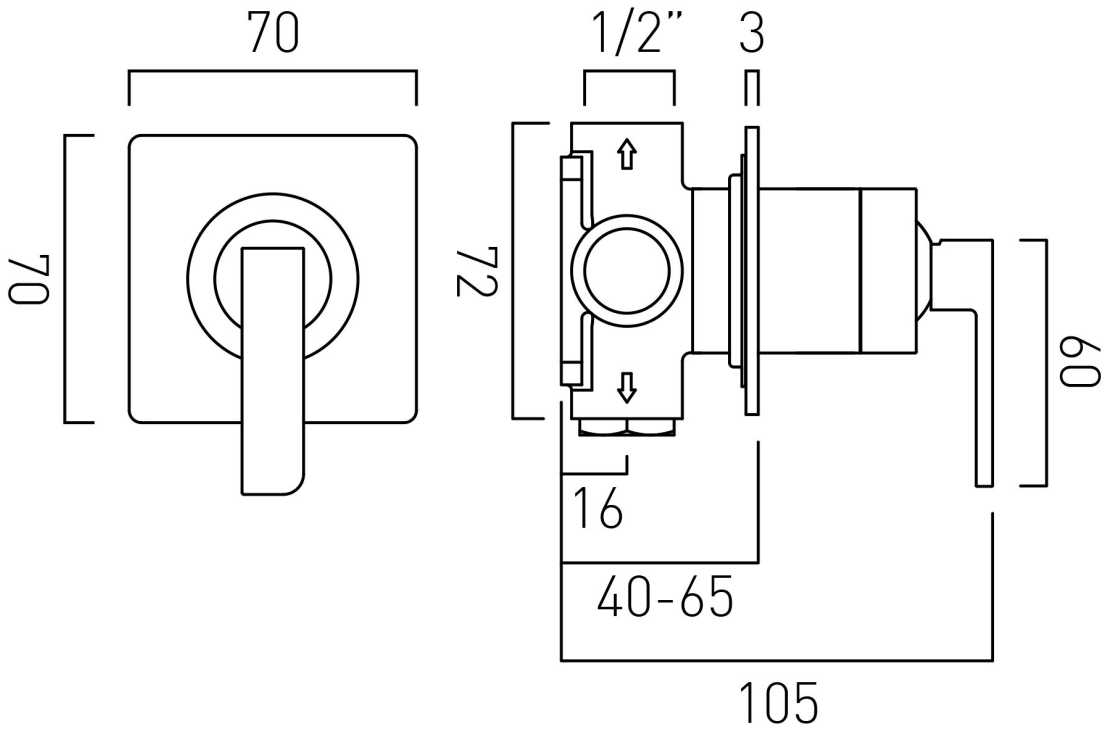


tel: 01934 744466
email: sales@vado.com
www.vado.com

**where inspiration flows**
taps | showering | accessories

VADO