SPECIFICATION SHEET

COLLECTION: LIFE

PRODUCT CODE: LIF-148D-C/P

DESCRIPTION:

DX Life
concealed 1 outlet 2 handle thermostatic
shower valve
wall mounted
with oval backplate
thermostatic cartridge V-001C-PLA
flow cartridge C-301-RTC
2 x 34 female inlets
1 x 34 female outlet
includes 34 - 12 adaptors
inc bleed valve for sys

FINISH:

Chrome

WATER SAVING:

recommended flow regulator product code: FR-100/5-PLA

MINIMUM OPERATING PRESSURE:

0.2 bar LP (shower) 1.0 bar MP (bath)

FLOW RATE AT 3.0 BAR FLOW PRESSURE:: /min

12 year guarantee

tel: 01934 744466
email: sales@vado.com
www.vado.com

where inspiration flows
taps | showering | accessories

VADO

TECHNICAL DRAWING

COLLECTION: LIFE SHOWERS
PRODUCT CODE: LIF-148D-C/P

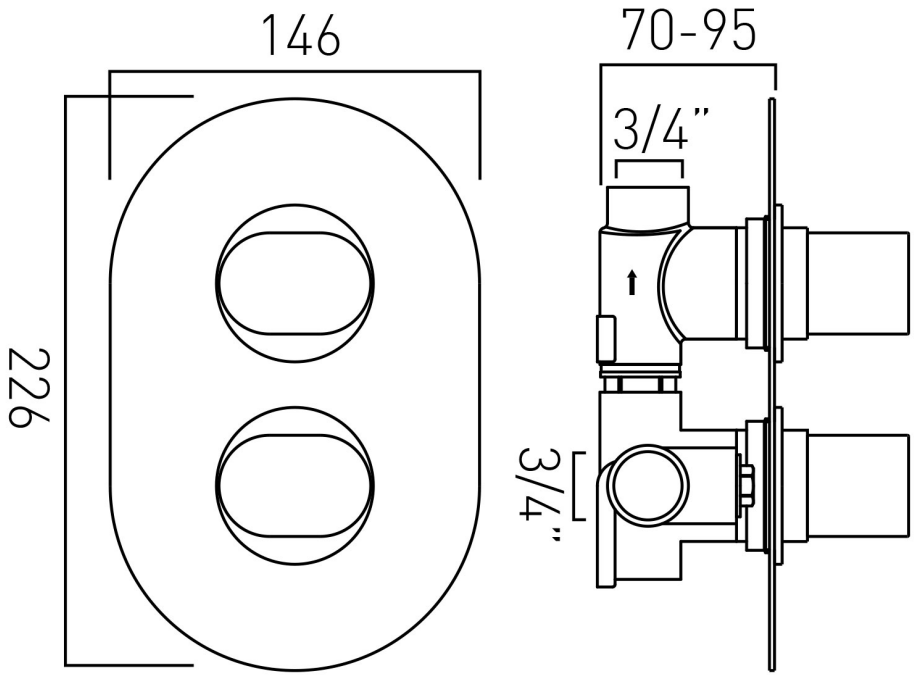

tel: 01934 744466
email: sales@vado.com
www.vado.com

where inspiration flows
taps | showering | accessories

VADO